International Journal of Scientific & Engineering Research Volume 10, Issue 5, May-2019
ISSN 2229-5518

Shearlag Behaviour of Hat Shaped Laminated Composite Box Sections

Praseeja KC, Nithin Mohan

Abstract— Laminated composites is a new construction material, gradually gaining popularity in a large variety of structures including aerospace,marine and civil infrastructure due to their high strength, stiffness, light weight and durability.It is generally assumed in bending theory that plane sections remain plane after loading,this assumption does not hold for box beam with wide flanges.shear lag effect can bring uneven normal stress distribution on flanges;it would affect the strength design of thin walled beams.In this paper effect of shearlag on laminated composites is examined.The present study focuses on the way for finding out the shearlag effects on symmetrically laminated graphite epoxy thin walled composite box beams under flexural loading. A parametric study has been conducted using the homogeneous and orthotropic hat shaped box beam sections.Effects of breadth to depth ratio,hat angle and orthotropic parameter and cross sectional parameter are studied.

Index Terms—Box beams,flexural loading, Laminated composites,Shear lag,Thin walled beams,Orthotropic parameter.

1 Introduction

Laminated composites have been used in many engineering structures from early time the recent advancements in material technology has led to the creation of a new composite with enhanced properties. The FRP composites have become an integral part of the construction industry because of their versatility, high strength-toweight ratio, enhanced durability, resistance to fatigue and corrosion, accelerated construction as well as lower maintenance and life-cycle costs. Advanced FRP composite materials are emerging for a wide range of civil infrastructure applications, space applications and bridge engineering. Meantime, box beam applications have also been increased in bridges due to their high inherent torsional stiffness.

While it is usually assumed in bending theory that plane sections remain plane after loading, this assumption does not hold for short span beams with wide flange. The non-uniform normal strains/stresses in the thin-walled flanged flexural members are defined as shear lag. In the structural analysis of bridges, shear lag have to be considered in design in some circumstances. Shear lag takes place when some parts of the cross section are not directly connected. For a box-girder bridge, not all parts of flanges are joined directly to webs so that the connected part becomes highly stressed while the unconnected flanges are not fully stressed.

In particular, for wide flanges of box-girder bridges axial loads are transferred by shear from webs to flanges which result in the distortion in their planes. Consequently, the plane sections do not stay plane and the stress distribution in the flanges are not uniform. Moreover, there is a tendency for longitudinal in-plane displacements of bridge deck away from the flange/web connection to lag behind those parts of the bridge in close vicinity to the flange/web connection.The previous researches prove that the shear lag effect affect the strength and rigidity of structure. Therefore, the research of the shear lag effect is Necessary.

[1]The paper presented a simplified and computationally efficient procedure for the analysis of single cell FRP box-girder bridges made of blade angle or T stiffened panels, for efficient use at the design stages. [2] The present study thus reveals the influence of the parameters that characterize the geometry of a box girder on the deflection. empirical formulas are proposed to compute the deflection magnification factors that account for the difference between the deflections due to the finite element analysis and the beam theory. the formulas adopted in the design codes underestimate the deflection considerably. [3] The paper studied the effect of shear lag of composite laminated plates with buckling form an applied analysis model for thin-walled composite box beams under bending loads. In this model, shear lag effect; shear deformation effect, and ply stresses; strains of the flanges in thin-walled composite box beams can be investigated and expressed explicitly.

The present study investigates about analysis of hat shaped box beam and approach for finding out the shear lag effects on symmetrically laminated thin walled composite box beams under flexural loading. A parametric study has been carried out using the homogeneous and orthotropic sections.

2 Shear lag

Shear lag phenomenon has been studied for many decades by many researchers. But those works are mainly focused about the effect of shear lag on stress and deflection of beam. The normal stress distribution is not uniform in the wide flange, but the stress is maximum in general at the flange-web intersection, decreasing toward the middle of the flange. This phenomenon is known as the shear lag. Fig.1 shows the shear lag in wide flanges of simply supported box girder. Linear orthotropic properties of graphite epoxy material shown in Table1.

- *Praseeja KC is currently pursuing masters degree program in structural engineering in APJ Abdul Kalam Technological University,India,E-mail: praseejachandran95@gmail.com*
- *Nithin Mohan is currently working as assistant professor in Vidya academy of Science and Technology, Thrisssur, India,E-mail: nithin.m@vidyaacademy.ac.in*

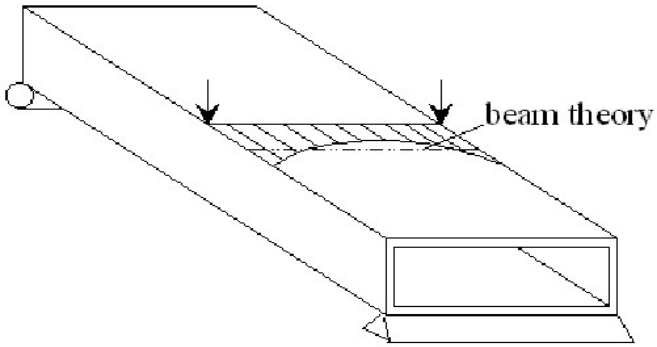

Fig. 1 Shearlag in wide flanges of simply supported box girder (Typical variation of stress across top flange)

In the present work a simplified approach, a three bar method for evaluating the shear-lag effects in graphite epoxy box sections adopted as defined by Upadhyay and Kalyanaraman[1]. The following expressions are used to obtain the shear lag.

$$E_{Z(i)} = ETS(i)/TE(i)$$

$$b_s = width\ of\ flange/10$$

$$k = \sqrt{A_{66,F}/b_S\left\{\frac{2}{AFE \times E_{Z,F}} + \frac{1}{AWE \times E_{Z,W}}\right\}}$$

$$N_x = M/(D(2AWE + AFE))$$

$$N_{x,MAX} = N_x(1 + (AFE/(AWE \times k \times LENGTH)))$$

$TE(i)$ and $E_z(i)$ are the equivalent thickness and equivalent modulus of elasticity of the i'th panel respectively. AFE and AWE are the equivalent areas of flange and web. D is the depth of section. $A_{66,F}$ is the in plane shear stiffness of the flange. Based on the elementary theory of bending, the in-plane stress, N_x, in the longitudinal direction of the panel is due to longitudinal bending moment M. $N_{x,MAX}$ is the maximum edge stresses in flanges of a simply supported girder subjected to central point load. 'k' is the shear-lag parameter. $N_x/N_{x,MAX}$ is signifying the shear lag effect. If the ratio is equal to one, it indicates, there will not be any shear lag effect. ω and K are the two parameters which governs the shear lag effect. The approach for finding out this parameters are adopted as defined by Rajeev chandak et al [4].

$$\omega = \{(1/2)\times(A_{11}/A_{66})tf\} + \{(1/6)\times(A_{11}/A_{66})w\}$$

$$K = [EA_{TF}/EA_G] + [(D_{11_{TF}})/(EI_G)]$$

$$EA_G = EA_{TF} + EA_{BF} + EA_W$$

$$EA_{TF} = ET_{TF} \times B$$

$$EA_{BF} = ET_{BF} \times b$$

$$EA_W = ET_W \times (h - t_{tf} - t_{bf}) \times 2$$

$$ET_{TF} = [A_{11_{TF}} - \{A_{12_{TF}} \times (A_{12}/A_{22})tf\}]$$

$$ET_{BF} = [A_{11_{BF}} - \{A_{12_{BF}} \times (A_{12}/A_{22})bf\}]$$

$$ET_w = [A_{11_w} - \{A_{12_w} \times (A_{12}/A_{22})w\}]$$

$$EI_G = EI_{TF} + EI_{BF} + EI_W$$

$$EI_{TF} = [\{D_{11_{TF}} \times B\} + \{EA_{TF} \times (n_c - t_{TF})^2\}]$$

$$EI_{BF} = [\{D_{11_{BF}} \times B\} + \{EA_{BF} \times (D - n_c - t_{BF})^2\}]$$

$$EI_W = \{ET_W \times ((D - t_{TF} - t_{BF})^3/12)\} + \{EA_W \times ((D - t_{TF} - t_{BF})/2 - n_c - t_{TF})^2\}$$

EA_{TF}, EA_{BF} and EA_W are axial stiffness of top flange, bottom flange and web respectively. ET_{TF}, ET_{BF} and ET_W are flexural stiffness's of the elements. 'h' will be the length of web. 'ω' is the orthotropic parameter of top flange and web depends on extensional stiffness of elements. The parameter 'K' is the cross sectional shape parameter. Three fiber orientations 0°, ±45°, and 90° are considered to cover extreme cases of orthotropy.

Table1. Linear orthotropic properties

E_1(GPa)	E_2(GPa)	G_1(GPa)	μ_1	μ_2
145	16.5	4.48	0.314	0.037

3 Parametric Study

3.1 Effect of Orthotropic Parameter

Many box beam sections were selected each with 8 symmetric layers. When flange has ±45° fiber orientation, shear lag effect is lower than 90° because ±45° provides enough shear stiffness to laminate and the shear lag is almost low and constant. In each combination, the distribution of stress differs considerably. Fiber orientation affects on the shear lag phenomenon clearly shown in Table2-6.

Table2: Shear lag of box section having tf=tw=2mm, constant K=0.461

B (mm)	D (mm)	L (mm)	Fiber orientation(degree)	Shear lag	ω
500	100	3000	0/0/0/0	0.65	21.822
			90/90/90/90	0.846	2.483
			45/-45/45/-45	0.942	0.836

Table3: Shear lag of box section having tf=tw=2mm, constant K=0.331

B (mm)	D (mm)	L (mm)	Fiber orientation(degree)	Shear lag	ω
450	300	2700	0/0/0/0	0.792	21.822
			90/90/90/90	0.918	2.483
			45/-45/45/-45	0.971	0.836

Table4: Shear lag of box section having tf=tw=2mm, constant K=0.372

B (mm)	D (mm)	L (mm)	Fiber orientation(degree)	Shear lag	ω
400	200	2400	0/0/0/0	0.758	21.822
			90/90/90/90	0.903	2.483
			45/-45/45/-45	0.969	0.836

Table5: Shear lag of box section having tf=tw=2mm, constant K=0.391

B (mm)	D (mm)	L (mm)	Fiberorientation(degree)	Shear lag	ω
350	150	2100	0/0/0/0	0.737	21.822
			90/90/90/90	0.893	2.483
			45/-45/45/-45	0.96	0.836

Table6: Shear lag of box section having tf=tw=2mm, constant K=0.359

B (mm)	D (mm)	L (mm)	Fiber orientation(degree)	Shear lag	ω
550	300	3300	0/0/0/0	0.768	21.822
			90/90/90/90	0.908	2.483
			45/-45/45/-45	0.971	0.836

The influence of ω, which is the orthotropic parameter, indicates that the effective width decreases with increase in value of ω. $(0/0/0/0)_s$ fiber orientation exhibit highest shear lag effect due to the significant influence of orthotropy. For 0^0 fiber orientation has more Orthotropic parameter value. $(45/-45/45/-45)_s$ has the lowest orthotropic value. When ω increases, consequence of shear lag increases.

3.2 Effect of Cross Sectional Shape Parameter

Many box beam sections were analyzed. Shear lag parameter was calculated for constant ω.

Table7: Shear lag of box beam having tf=tw=2mm, constant ω = 21.822 and $(0/0/0/0)_s$

B (mm)	D (mm)	L (mm)	Shear lag	K
350	100	1750	0.648	0.435
400	150	2000	0.684	0.407
450	200	2700	0.74	0.385
500	250	3000	0.756	0.37
550	300	3300	0.768	0.359

Table8: Shear lag of box beam having tf=tw=2mm, constant ω =2.483 and $(90/90/90/90)_s$

B (mm)	D (mm)	L (mm)	Shear lag	K
350	200	1750	0.894	0.354
400	200	2000	0.885	0.372
450	200	2250	0.875	0.385
500	300	2500	0.897	0.346
550	300	2750	0.891	0.359

Table9: Shear lag of box beam having tf=tw=2mm, constant ω = 0.836 and $(45/-45/45/-45)_s$

B (mm)	D (mm)	L (mm)	Shear lag	K
350	100	2100	0.951	0.435
400	100	2000	0.938	0.446
450	300	2250	0.965	0.331
500	200	3000	0.958	0.398
550	150	2750	0.94	0.437

Table7 represents the shear lag of models with $(0/0/0/0)_s$ fiber orientation. Table8 and Table9 shows models with $(90/90/90/90)_s$ and $(45/-45/45/-45)_s$ fiber orientations respectively. K is the cross sectional shape parameter and effective width decreases for larger values of K. Results prove that for constant ω value, shear lag parameter decreases with increasing the value of K. When length and depth increases, shear lag effect decreases.

3.3 Effect of Breadth to Depth ratio

Shearlag analysis was done for various box beam sections. Linear orthotropic properties for graphite epoxy material are taken as per Table1. Each section has 8 symmetric layers. Specimens have thicknesses of flange and webs are 2mm. 'b' is the bottom flange width of hat section. By keeping, B, L/B, tf/tw, fiber orientations as constant values and by changing B/D ratio, shear lag is calculated. Fiber orientations 0°, ±45°, and 90° are considered.

Table10. Shear lag of box beam having B=550, b=360mm, L=3300 and Fiber orientation = $(0/0/0/0)_s$ by changing B/D ratio

B/D ratio	Shear lag
1.83	0.768
2.2	0.745
2.75	0.717
3.67	0.683
5.5	0.644

Table11. Shear lag of box beam having B=450, b=300mm, L=2250 and Fiber orientation = $(45/-45/45/-45)_s$ by changing B/D ratio

B/D ratio	Shear lag
1.5	0.965
1.8	0.96
2.25	0.954
3	0.945
4.5	0.933

Table12. Shear lag of box beam having B=400, b=260mm, L=2400 and Fiber orientation = $(90/90/90/90)_s$ by changing B/D ratio

B/D ratio	Shear lag
4	0.861
2.67	0.885
2	0.903
1.6	0.916

Table10-12 shows the variation of shear lag with respect to B/D ratio. It can be observed that the shear lag effect increases with increase in 'B/D' ratio. The cause is shear stiffness of flange decreases with increase in flange width. Shear lag effect is more for box beams with less depth.

3.4 Effect of Hat Angle

Shear lag effect of many box setions were calculated. Linear orthotropic properties are provided in Table1. Top flange width of two models is 550 and 450mm respectively. Corresponding fiber orientations are $(0/0/0/0)_s$ and$(45/-45/45/-45)_s$. Thicknesses of both flange and web are taken as 2mm. By keeping B, L/B, tf/tw, fiber orientations as constant and by changing hat angle in web flange junction, shear lag is calculated.

Table13. Shear lag by changing Hat angle for box beam having B = 550mm and length=3300mm

D(mm)	Hat angle (Degree)	Shear lag
350	74.81	0.788
300	72.428	0.768
250	69.193	0.745
200	64.592	0.717
150	57.652	0.683
100	46.468	0.644

Table14. Shear lag by changing Hat angle for box beam having B = 450mm and length=2250mm

D(mm)	Hat angle (Degree)	Shear lag
400	79.38	0.972
350	77.905	0.969
300	75.963	0.965
250	73.3	0.96
200	69.444	0.954
150	63.434	0.945
100	53.13	0933

Hat shape also affects the shear lag. The influence of shear lag factor is shown in Table13 and Table14. From this, it can be noticed that the shear lag factor decreases with decreasing hat angle, that is shear lag effect increases. Better performance in shear lag behavior observed at highest hat angles. In both fiber orientations, hat shaped box beams shows good performance upto a particular depth.

4 Conclusion

Behavior of laminated box beams is affected by shear-lag, fiber orientation and cross sectional parameters. By an approximate analysis method, shear lag effect predicted. The shear-lag effect is higher in FRP panels, due to their orthotropy and lower shear Stiffness. The orthotropy of panels is due to fibre orientation. That is ±45° and 90° fiber orientation of flange gives low shear lag effect as a consequence of less uneven stress variation in flange width. The study found parameters which have more influence on shear lag. When the value of orthotropic parameter increases, shear lag effect increases. Also It can be observed that with increasing of cross sectional shape parameter, shear lag effect increases. Shear lag effect increases with increase in 'B/D' ratio. Shear lag effect increases with decrease in hat angle. The results obtained from the analyses of this paper can provide orientation for the design of associated engineering structures.

References

[1] A.Upadhyay and V.Kalyanaraman,"Simplified analysis of FRP box girders",Elsevier, Journal of Composite structures 59,pp. 217-225,2003

[2] Chartree Lertsima and Taweep Chaimsophob,"Deflection of simply supported box girder including effect of shear lag", Elsevier, Journal of Computers and structures 84,pp. 11-18,2005

[3] Wu Yaping et al," Analysis of shear lag and shear deformation effects in laminated composite box beams under bending loads", Elsevier, Journal of Engineering structures,2004

[4] Rajeev Chandak et al, "Shear lag prediction in symmetrical laminated composite box beams using artificial neural network", Structural engineering and mechanics, vol 29,pp. 77-89,2007

[5] Q.Z.Lou et al, "Experimental studies on shear lag of box girders", Elsevier, Journal of Engineering structures,2002

[6] Jaturong Sa-nguanmanasaka et al, "Stress concentration due to shear lag in continuous box girders", Elsevier Engineering Structures, journal of Engineering structures, 2006

[7] C. Lertsima et al ," Stress concentration due to shear lag in simp ly supported box girders ", Elsevier, Journal of Engineering structures 26, pp-1093–1101,2004

[8] Q.Z. Luo et al, "Shear lag analysis of beam-columns", Elsevier, Journal of Engineering structures, 1131-1138, 2003

[9] Chuanxi Li et al, "3-Bar Simulation-Transfer Matrix Method for Shear Lag Analysis" Elsevier,pp-21-26,2011

[10] Yuanming Lai et al,"A finite beam element for analyzing shear lag and shear deformation effects in composite-laminated box girders", Elsevier, Journal of Computers and structures 82,763-771,2004